Name: _____ M036/II

MARANATHA (PVT) SECONDARY SCHOOL

2022 MALAWI SCHOOL CERTIFICATE OF EDUCATION MOCK EXAMINATION

CHEMISTRY

(PRACTICAL)

Subject Number: M036/II

Tuesday, 19 March, 2020 **Time Allowed: 2 hours sessions**

08:00am onwards

PAPER II

(40 marks)

Instructions:

1. **This paper contains 6 pages. Please check.**
2. Before beginning, write your **name** at the top of **each** page of the question paper.
3. Write your answers on the question paper.
4. This paper consists of two sections: A and B
5. Section **A** consists of **two** descriptive questions on practical work to be answered in 1 hour. Marks will be given for accurate and orderly presentation of facts and supported by relevant diaprams.
6. In Section **B,** there are **two** practical questions to be answered in 1 hour.
7. You should spend 30 minutes on each question. The 30-minute period allowed for each question include 3 minutes to tidy up the apparatus and have it checked by the supervisor.
8. Marks for section B will be given for observation accuracy and interpretation of result.In the table provided on this page, **tick** against the number of the question you have answered.

Question Number	Tick if answered	Do not write in these columns	
1			
2			
3			
4			

PLEASE DO NOT TURN OVER UNTIL YOU ARE TOLD TO DO SO.

Section A (20 marks)

1. A newly discovered element represented by the symbol X is suspected to belong to group 1 of the periodic table.
   a. Describe a chemical experiment you would do to prove that the element belongs to group 1.

_____
_____
_____
_____
_____
_____
_____
_____
_____
_____
_____
_____
_____
_____
_____
_____
_____
_____ **(8 marks)**

   b. Write a balanced chemical equation for the reaction between element **X** and water.

(2 marks)

.

2. An experiment was conducted on the titration of 0.2M NaOH with H_2SO_4. The results of the experiment were recorded in **Table 1:**

Volume of H_2SO_4 **(cm^3)**	0	5	10	15	20
Volume of H_2SO_4**+ NaOH (cm^3)**	20	25	30	35	40

Table 1

a. What was the aim of the experiment?

_____

_____ (1**mark)**

b. (i) Which solution was a standard solution?

_____ (1 **mark)**

(ii) Give a reason to your answer in Q2 b (i).

_____

(2 mark)

(iii) State any two sources of error in this experiment

_____

(1 mark)

c. Plot a graph of volume of H_2SO_4 + NaOH against volume of H_2SO_4

(5marks)

SECTION B (20 MARKS)

3. You are provided with the following materials: 3 connecting wires, 2 carbon rods, a beaker, liquids X and Y (ethanoic acid and ethanol but not necessarily in that order), 2 cells in a cell holder, a switch and an ammeter.

a. Set up the apparatus as figure 1:

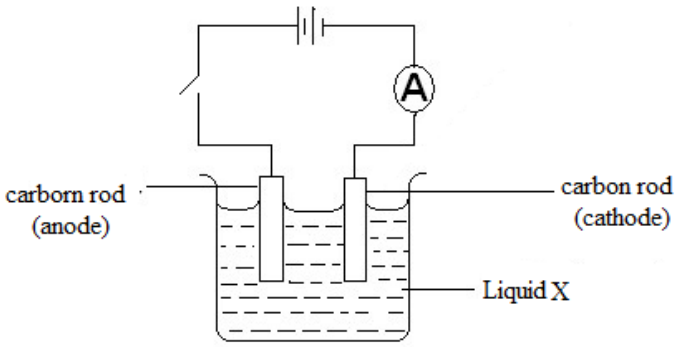

Figure 1

b. Close the switch.

c. Note the ammeter reading and record in the table of results.

d. Rinse up the carbon rods and the beaker with distilled water followed by liquid **Y**.

e. Repeat steps (a) to (c) with liquid B.

TABLE OF RESULTS

LIQUID	AMMETER READING (A)
Liquid X	
Liquid Y	

(2 marks)

f. Write down the functional group of liquid X.

_____

(1 mark)

g. With relevant chemical equations, briefly describe the preparation of liquid Y.

_____
_____
_____
_____
_____
_____
_____
_____
_____
_____
_____
_____
_____
_____
_____ **(7 marks)**

4. You are provided with two test tubes, metal ribbons of labelled **W**, **X** and **Y**; and salt solutions of these metals i.e. W sulphate, WSO_4, X sulphate, XSO_4 and Y sulphate, YSO_4.

a. Pour four drops of WSO_4 into each of the two test tubes.

b. Add a piece of X and Y metals to each test tube.

c. Observe whether a reaction takes place or not.

d. Record results by writing **reaction** or **no reaction** in appropriate boxes in the table of results.
NB: Do not conduct cancelled experiments.

Table of results

Metal / Solution	W	X	Y
WSO_4			
XSO_4			
YSO_4			

(6 marks)

e. Arrange the metals in order of increasing reactivity.

_____

_____

_____

(2 marks)

f. State two indicators used to know whether a reaction took place or not?

_____

_____

(2 marks)

END OF QUESTION PAPER